PoWer CUT Series

GeKaMac®

PoWer CUT 105

Users Manual

Please Read and Understand This Manual
Before Operating The Welding Machine

www.gedikwelding.com

This machine is for internal use only.

It complies with the WEEE Directive.

This machine has been designed in accordance with the EN 60974-1 and EN 60974-10 standards.

The machine is safe when installation, operation, and maintenance are performed in accordance with the user manual and regulations. The operator and machine owner are responsible for adhering to safety rules.

Gedik Kaynak San. Ve Tic. A.Ş. assumes no responsibility for safety or CE compliance if any modifications are made to the machine or if safety rules are not followed.

This Class A equipment is not suitable for use in homes and similar residential areas where the power supply is provided by the low-voltage public electricity network.

This machine is not household waste and cannot be disposed of in the trash.

When the machine reaches the end of its service life or becomes obsolete, it must be disposed of in accordance with regulations.

COMPLIES WITH THE WEEE DIRECTIVE.

Eco Design Statement

This machine has been designed and manufactured in accordance with the requirements of the 2009/125/EC Eco Design Directive concerning the environmentally friendly design of energy-related products.

Accordingly, machines with an idle mode are as follows.

	Idle Mode
MMA	**X**
MIG	√
TIG	√
Plazma	√
SAW	**Out of Scope**

Efficiency measurements should be conducted only on the power unit. The water cooling system should be disabled. For more information on measurements and machine settings, Gedik Kaynak Sanayi ve Ticaret A.Ş. should be consulted.

AT UYGUNLUK BEYANI

EU DECLARATION OF CONFORMITY

Bu uygunluk beyanı yalnızca imalatçının sorumluluğu altında düzenlenir.

This declaration of conformity is issued under the sole responsibility of the manufacturer.

İstanbul, Turkey, 08.03.2024

İmalatçı / Manufacturer

GEDİK KAYNAK SANAYİ ve TİCARET A.Ş.

Ankara Cad. No.306 Seyhli Pendik ISTANBUL TURKIYE

Ürün / Product	PLASMA CUTTING MACHINE
Marka-Model / Brand- Model	POWER CUT 105

Yukarıda tanımlanan beyanın nesnesi ilgili uyumlaştırılmış AB mevzuatı ile uyumludur.

The object of the declaration described above, is in conformity with the relevant union harmonisation legislation.

Direktifler / Directives	2014/30/EU & 2014/35/EU & 2009/125/EC EU/2019/1784

Uyumlaştırılmış standartlar ve uygunluğun deklare edilmesiyle ilişkili diğer referanslar.

References to the relevant harmonised standarts used and references to the other technical specifications in relation to which conformity is declared.

Standartlar / Standards	EN IEC 60974-1 EN IEC 60974-10

Bu ekipman, talimatlara uygun kurulduğunda, bakımı yapıldığında ve kullanıldığında belirtilen standartlara uygundur. Makine üzerinde bir değişiklik yapıldığında veya yanlış kullanımda deklarasyon geçersiz olur.

The equipment is in compliance with pertinent legislation when installed, utilized, and maintained in accordance with the enclosed instructions. This declaration will be invalid under any modification or improper use.

İmalatçı Adına İmzalayan / Signed for and on behalf of:

Hatice Özel, Equipment Business Unit Director

EN ENGLISH

Introduction	2
Description	2
GEKAMAC - Original spare parts	3
Usage limits (IEC 60974-1)	3
Power CUT 105 technical characteristics	4
Opening the packaging	5
Plasma cutting	5
Installation	5
Connection to the electrical supply	5
Usage norms	6
Connection of plasma torch and ground wire	7
Connection of compressed air	8
Sequence of operations to perform before cutting	8
Maintenance	9
Troubleshooting table	9-10
Common cutting defects	11
Meaning of graphic symbols on machine	12
Key to the electrical diagram	12
Wiring diagram Power CUT 105	13
Spare Part List	17-18-19-20-21
Ordering Spare Pars	22

Introduction

Thank you for buying our product.
In order to get the best performance out of the machine and ensure the maximum lifespan of its parts, the use and maintenance instructions contained in this manual must be read and strictly complied with, as well as **the safety instructions contained in the relevant folder**. If repairs to the machine are required, we recommend that our clients contact our service centre workshops, as they have the necessary equipment and personnel that are specifically trained and constantly updated.
All our machines and equipment are constantly developed and so changes may be made in terms of their construction and features.

Description

After significant investments and resources put into research, these inverter generators, with new technology torches, make a significant increase in the quality and speed of the cutting process possible. This quality takes the form of precise outlines, edges without burrs, a limited thermally altered zone, and a sufficiently square edge.
Our **GEKAMAC** systems are an efficient solution when it comes to cutting any metal and perforated plates. The inverter's elec-tronic control, precision, and flexibility make it possible to de-termine the most correct parameters, in order to ensure high quality cutting specifically related to the thickness and type ofmaterial to be cut.
Thanks to the new **GEKA** torches for manual cutting, and **Power CUT 105** for automated CNC cutting, the **Power CUT 105** models make it pos- sible to make cuts without using high frequencies to ignite the arc, thereby reducing disturbance of the external environment.
The salient technical characteristics that are common to all machines, are as follows:

- Three-phase power supply.
- Stability of cutting parameters, despite power supply fluctuations.
- Automatically resetting protective devices against undervoltages and overvoltages on the electricity mains.
- Trip switches to protect against overloading.
- Reduced energy consumption.
- Electronic control for excellent cut quality.
- Professional, high flow rate air system.
- Torch with pilot arc.
- Centralised torch connection.
- Electrical protective device on the torch to guarantee the operator's safety.
- Capacity to cut meshes and perforated plates.
- Capacity for contact cutting with currents less than 50A, without using slides or other spacers.
- Air filter and regulator unit with automatic expulsion of impurities, complete with pressure gauge for measuring the air pressure at the machine intake.
- Innovative, functional design, with an inclined front panel, making it clearly visible from any angle, for easy reading and setting of parameters.
- Metal loadbearing structure, with front panels on impact-resistant fibre, and commands protected against accidental impacts.
- Strong handle built into the frame.

- IP23S protection level and electronic parts protected against dust, thanks to the innovative “tunnel” ventilation system, which allows the unit to be used in the most problematic working environments.
- Smart Start Transfer function, for better control over the initial cutting phase. Innovative electronic circuit that allows optimum, gradual transferring of the pilot arc to the main arc, while the cutting arc is being ignited, ensuring immediate stability of the plasma flow and longer duration of consumables used for the torch.
- Smart End Cutting function, for better control over the final cutting phase. Once cutting has been completed, the current reaches an optimum value, which allows definitive detachment of the pieces. In addition to reducing the noise when cutting ends, this device means that the operator does not have to separate the pieces manually, thereby ruining the final portion of the cut surface.

GEKAMAC torches

The **GEKAMAC** torches, used with the GEKAMAC machines, are the result of research done over the last decade, aimed at improving the performance of the plasma beam, in order to in-crease control and thermal energy.

More specifically, torches are
characterised by High Performance Cutting (HPC) technology, which makes it possible to increase the quantity and speed of the air, enhance concentration of the plasma beam, and stabilise the cutting arc, which allows:
- High cutting speeds.
- Optimum quality and cleanliness of the cutting surfaces.
- High concentration of the Plasma beam.
- Absence of burrs.
- Reduction of the thermally altered zone.
- Longer lifespan for consumables.
- Piercing of plating more quickly.
- Gouging to remove material with the help of a plasma beam.

All **GEKAMAC** torches are fitted with a coaxial cable that ensures great flexibility, combined with significant strength and resistance to crushing.
The **High Performance Cutting - HPC** technology, makes it possible to generate radial and vortex gas flows about the arc’s axis, thereby creating a Plasma beam at very high temperature that pierces and vaporises the surface being worked more efficiently.
This technology also makes it possible to avoid double arcs from forming - two arcs in series between the cathode and the workpiece’s surfaces - which is mainly responsible for damaging the nozzle and instability of the arc - ensuring execution of very high quality cuts, along with longer duration of consumables.

Vortex gas flows and collimation of the beam
The new **GekaMac torches**, equipped with **High Performance Cut- ting**, increase the density of the Plasma beam’s energy, while reducing the width of the arc’s area of action, producing a nar- rower cut path, at less of an angle, easily removing molten material. This results in a better-quality cut that has neat sur- rounding without burrs, a limited extent of the thermally alteredzone, and a sufficiently squared edge.
The main advantages include:
- Better cut quality.
- Higher cutting speed.
- Narrower cuts.
- Long duration of consumables.

GEKAMAC - Original spare parts

CS is our guarantee mark for all PlasmaTECH consumables. The **CS** mark is to be found on all original spare parts for GEKAMAC torches, used for the GEKAMAC machines.
The presence of the GEKAMAC mark on all consumables, is a guar- antee for those buying a cutting machine, that the machine’sdeclared performance levels will be delivered.
The geometric shapes, quality of the materials used, and precision of the machining and coupling of the same, resulting from years of experience, form the basis for developing the GEKAMAC torches, and use of the same with our cutting generators. We highly recommend the use of original spare parts marked GEKAMAC. In addition to compromising optimum function of the ma- chine, using pirate parts could result in overheating and fluctu- ations in electrical voltages, which is turn can cause:
- Overheating and damaging of the torch.
- Malfunctions and faults on the generator.
- Worsening of cut quality.
- Lessening of machine safety.

In light of the above, using any parts other than GEKAMAC not only causes the warranty on the machine to be null and void, but it also means that GEKAMAC PlasmaTECH cannot be held responsi-ble in case of any accidents.

Usage limits (IEC 60974-1)

The use of plasma equipment for cutting is typically discontinuous as it consists of periods of effective operation (cutting) and rest periods (while the piece is being positioned, etc.). The size of the equipment is suitable for safe use of max. nominal current I_2 for a working time that is 40% of the total time of use. The regulations in effect stipulate that 10 minute is the maximum total time of use. For the work cycle, 40% of that time is considered. Any excess of the permitted work cycle triggers a thermal circuit breaker which protects the internal components of the equipment against dangerous overheating. When the thermal circuit breaker is triggered, the yellow LED on the front of the equipment is lit (Pos. 3, Fig. B). After a few minutes the overheat cutoff resets itself automatically and the yellow LED goes off, indicating that the equipment is once again ready for use. This equipment is built to have a protection level of IP 23 S, which means:
- That it is protected against the penetration of solid foreign bodies with diameters in excess of Ø 12 mm.
- That it is protected against water spray hitting the surface with an angle of incidence up to 60°.
- That the equipment has been tested for withstanding harmful effects due to water getting in when the moving parts on the equipment are moving.

Power CUT 105 technical

The powerful, compact Power CUT 105 model is a plasma unit that satisfies the needs of medium / light metalwork most fully. The cuts are always precise and ensure high cutting stand- ards in any situation.
High quality and cutting speed thanks to the GEKAMAC torch, with (HPC) High Performance Cutting technology, which ensures aconcentrated, powerful plasma beam.
Further particular features of this machine include:

- GEKAMAC torch with (HPC) High Performance Cutting technol-ogy and coaxial cable.
- Powerful, compact and light-weight, only 23,9 kg.
- High productivity thanks to high cutting quality and speed.
- Lower operating costs due to the long lifespan of consum-ables.
- "Energy Saving" function that starts ventilation of the gener-ator only when necessary.
- Electrical protective device on the torch to guarantee the op-erator's safety.
- The possibility of automated CNC cutting, using the Power CUT 105 version, fitted with a straight GEKAMAC torch.

The technical data for this equipment is summarized in the ta-ble 2.

Table 2

Model		**Power CUT 105**
Three-phase power supply 50/60 Hz	V	400
Mains supply: Z_{max}	Ω	0,109
Power input @ I_2 Max	kVA	15
Delayed fuse (I_2 @ 100%)	A	16
Power factor / cosφ		0,90 / 0,99
Efficiency degree	η	0,88
Input power at IDLE state	W	15
Open circuit voltage (peak)	V	300
Current range	A	20 ÷ 100
Duty cycle @ 100% (40°C)	A	70
Duty cycle @ 60% (40°C)	A	90
Duty cycle @ 40% (40°C)	A	100
Cutting capacity recommended maximum severance piercing	 mm mm mm mm	 30 35 40 20
Type of machine intake air/gas		**AIR** - Clean, dry, oil-free for ISO 8573-1 Class 1.2.2 **N2** - 99.95%
Air pressure		5,0 ÷ 6,0
Air flow		280 ÷ 330
Standards		IEC 60974-1 IEC 60974-7 IEC 60974-10 CE S
Protection class		IP 23 S
Insulation class		F
Dimensions	mm	595-390-185
Weight	kg	23,9

WARNING: *This equipment complies with* **EN/IEC 61000-3-12** *provided that the maximum permissible system impedance Z_{max} is less than or equal to 0,107 at the interface point between the user's supply and the public system. It is the responsibility of the installer or user of the equipment to ensure, by consultation with the distribution network operator if necessary, that the equipment is connected only to a supply with maximum permissible system impedance Z_{max} less than or equal to 0,107.*

This system, tested according to **EN/IEC 61000-3-3**, *meets the requirements of* **EN/IEC 61000-3-11**.

Opening the packaging

The standard composition of this plasma cutting system is made up of:
- Plasma cutting units.
- Plasma torch with centralized connection and initial supply spare parts kit.
- Ground cable.
- Trolley for transportation (optional).

On receipt of the unit, perform the following operations:
- Remove the plasma cutting unit and all relative accessories and components from the packaging.
- Check that the plasma cutting unit is in good condition. If it is not, inform your dealer immediately.
- Make sure that all the ventilation louvers are open and that the airflow is not obstructed.

Plasma cutting

The cutting system used by this equipment is a low current system that uses compressed air as its plasma equipment as well as for cooling. The air normally used is a mixture of 79% nitrogen and 21% oxygen. These two biatomic gasses have almost identical enthalpy and form a highly energetic blend. The low current also makes it possible to use torches with a low air capacity and moderate cutting speed, that are more suitable for manual procedures.

CUTTING PARAMETERS

In analyzing the parameters that characterize manual plasma cutting it is necessary to note that they depend on the material to be cut, its thickness and the skill of the operator in following the cutting line. Optimum speed depends largely on the skill of the operator and amount of material to be cut and is achieved when the fused material flows through the groove and is not projected in the direction of the torch. If the latter occurs, cutting speed has to be reduced.

The parameters that affect cutting are:
- **Electric power.** Any increase in electric power will permit higher cutting speed and greater thickness of the material to be cut
- **Compressed air capacity.** Increasing the air capacity enables cutting thicker material and ensures better quality at any thickness
- **Distance between the nozzle and workpiece.** The appearance of the cut and wear of the torch's working parts, depend on the correct distance between the nozzle and the workpiece.

NOTE: *The width of the cut path is equal to about twice the diameter of the hole in the nozzle.*

Respect of the above recommendations ensures greatly reduced thermal alterations of the material due to cutting, that are in any case always fewer than those caused by oxygen torches. The thermally altered zone is in any case smaller than the zone on which the weld is effective, so that in welding pieces that have been cut by plasma it is not necessary to perform any cleaning or grinding operations.

Installation

The place where the equipment is installed should be selected with care so as to ensure satisfactory, safe use.

The user is responsible for installation and use of the equipment according to the instructions provided by the manufacturer in this manual.

Temperatures must be between -25 °C e +55 °C. during transportation and/or storage in stores.

Before installing the equipment, the user should take into con-sideration any possible electromagnetic problems in the workarea.

In particular, we recommend that the equipment not be installed in the vicinity of:
- Signalling, control and telephone cables.
- Radiotelevision transmitters and receivers.
- Computers or controlling and measuring instrument.
- Safety and protection devices.

If the operator wears a pacemaker, hearing aid or other similar device, he should consult his doctor before approaching the equipment while it is running. The environment where the equipment is installed must conform with the degree of protection of the chassis that is IP 23 S (IEC publication 60529). The system is capable of working in environments where working conditions are particularly hard.

This equipment cools water by forced circulation of air and must therefore be positioned in such a way that the air can easily be drawn in and expelled through the openings in the chassis.

Connection to the electrical supply

Connection of the machine to the user line (electrical current) must be performed by qualified personnel.

Before connecting the cutting equipment to the mains supply, check that the data on the machine plate correspond to the supply voltage and frequency and its main switch is on the "0" position.

This system has been designed for nominal voltage 400 V - 50/60 Hz.

The connection to the supply, should be made with four core cable which is supplied with the machine, connecting:
- Three wires the supply.

Connect a suitable plug (3p+e) of proper capacity to the mains cable and fix to a socket fitted with fuses or automatic switch: the proper ground terminal must be connected to the ground connector (yellow-green) of the main supply.

Table 3 shows the capacity values that are recommended for fuses in the line with delays.

Table 3

Model		**PowerCUT 105**
Power input @ I_2 Max	kVA	15
Delayed fuse (I_2 @ 100%)	A	16
Duty cycle @ 40% (40°C)	A	100
Mains supply connection cable Length Section	 m mm^2	 4 2,5
Ground cable Length Section	 m mm^2	 4 10

NOTE: *If extensions of the power supply cable are used, they must be of adequate cross section and never inferior to that of the cable supplied.*

Usage norms

COMMAND AND CONTROL DEVICES (Fig. A)

Pos. 1 Control panel (Fig. B).
Pos. 2 Snap-in connector for ground line.
Pos. 3 Connector, 14 pole, for CNC control interface (optional extra).
Pos. 4 Centralised torch attachment.
Pos. 5 Power supply switch.
Pos. 6 Cutting machine power supply cable.
Pos. 7 Fast coupling to connect compressed air tube.
Pos. 8 Filter and cutting air pressure regulator. The air filter automatically expels impurities.
Pos. 9 Pressure gauge for reading cutting air pressure.

CONTROL PANEL (Fig. B)

Pos. 1 Cutting current adjustment knob.
Pos. 2 Yellow LED: signals lack of compressed air. It lights up when air pressure is below the set value.
Pos. 3 Yellow LED: signals intervention of overheat cutoff. This LED shines to indicate that the overheating protection has cut in because the work cycle is not being followed. After several minutes the overheat cut-off rearms automatically (and the yellow LED turns itself off) and the welder is ready for use again.
Pos. 4 Green selection LED for full cut mode. When this LED is switched on, it means that the operator has set the cutting mode for solid material.
Pos. 5 Green selection LED for mesh cutting mode. When this LED is switched on, it means that the operator has set the cutting mode for mesh material.
Pos. 6 Cutting mode selection button.
This can be used to select one of the 2 cutting modes, as indicated by the corresponding LED that switches on:

- Solid material mode (when the torch button is pushed, when the operator goes out of the workpiece during cutting, the arc switches off automatically).
- Mesh material mode (when the torch button is pushed, when the operator goes out of the workpiece during cutting, the pilot arc ignites again automatically, to allow cutting to continue).

Pos. 7 Compressed air button.
When this button is pushed and released, the cutting air valve opens, allowing the operator to regulate the compressed air pressure, using the filter / regulator knob (Pos. 8, Fig. A) located on the back panel.
The pressure gauge (Pos. 9, Fig. A) provides a reading for the cutting air pressure.
The operation is terminated manually by pushing the cutting torch button, or automatically after a time of about one minute.
Pos. 8 Green compressed air button LED
When this LED is switched on, this means the operator is doing the compressed air test.
Pos. 9 Red inverter switch on indication LED. The machine is “on” and ready for the cutting operation.
Pos. 10 Red LED: signals activation of torch button. When the torch button is pushed, the LED switches on and the machine checks correct functioning of the plasma torch connection.
Pos. 11 Green LED - power supply on. When on the system is powered and ready for use.

FIG. A

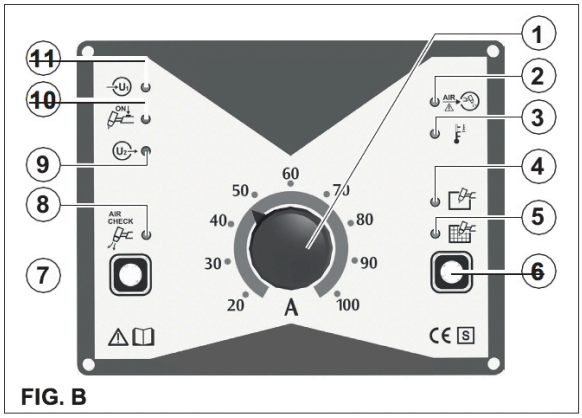

FIG. B

Connection of plasma torch and ground wire

IMPORTANT: *Before performing any operation regarding connection of the torch and ground wire, disconnect the power to the system.*

IMPORTANT: *Do not connect to the Plasma equipment any other torch different from the standard supplied unes; the utilisation of other non suitable torches might be dangerous for the operator.*

To obtain elevated cutting quality, the torch must transform the power generated by the machine into a high energy density plasma jet, so that it can efficiently melt metal and guarantee sufficient strength to remove the meted part from the cutting zone, impeding the formation of burrs. The torch is this a fundamental, indispensable component of the plasma cutting machine.
The standard supplied Plasma torch has special GEKAMAC elec- trical connections in the central adaptor. Before fitting a new equipment, make sure that the torch central adaptor electrical connectios are matching the ones of the Plas- ma equipment.
The following plasma torches are supplied with the machine
To assemble the plasma torch, proceed as follows:

- Screw the male connection on the plasma torch clockwise all the way into the corresponding centralised female connection, located on the front of the plant.
- Align the male polarisation pin (n° 8) with the corresponding pin (n° 8) on the plasma torch's male coupling (Fig. C).

To disconnect the torch, proceed in the reverse order.

To assemble the earth cable, proceed as follows:

- Connect the earth cable to the rapid coupling on the positive pole as indicated in figure C.
- The earth cable must be connected to the workpiece to be cut, using the relevant terminal, so that the workpiece is effectively earthed along with the cutting bench.

To connect the earth cable correctly:

- Make sure that the metal-to-metal contact between the earth clamp and the steel plate is adequate. Remove any rust, dirt, paint, coating or other debris, in order to ensure correct contact between the generator and the steel plate.
- In order to achieve an excellent quality cut, connect the earth clamp as close as possible to the area to be cut.
- Do not connect the earth clamp to the piece of material to be removed.

FIG. C

Connection of compressed air

Connect the compressed air hose to the rapid coupling (Fig. D). Use a compressed air hose with a minimum internal diameter of 8 mm.
Make sure that the gas feed pressure does not exceed 8,6 bar / 861 kPa. If the pressure is higher than this value, the filter could explode.
The plant must be fed with a constant air flow, with the following characteristics:

Equipment	Power CUT 105
Torch	GekaMac Torches
Air / gas	**AIR -** Clean, dry, oil-free for ISO 8573-1Class 1.2.2 **N_2 -** 99.95%
Pressure	Cutting: 5,0-6,0 bar 72-87 psi Gouging: 4,0-4,5 bar 58-65 psi
Flow rate	295 l/min 630 cfh

Having pressed the compressed air button (Pos. 7, Fig. B), set the pressure regulator to obtain the value indicated on the table above, by raising and then rotating the ring nut, as indicated in figure D. Once regulation has been completed, lower the ring nut.

NOTE: *The pressure must be set with the pressure rising, while the air / gas is flowing.*

If the quality of the air / gas supply is not good, the cutting speed diminishes, the cut quality worsens, the cuttable thickness diminishes, and the working lifespan of consumables is reduced.
If moisture, oil or other pollutants get into the air line, due to the general compressor, use the additional GEKAMAC filtration sys-tem, code 427529 (Fig. D) with a filtration grade of 0,01 µinch
- 0,25 µm available via GEKAMAC PLASMATECH distributors (theorder code for replacement filters is 427530).
The additional filtration system must be installed between the air / gas supply and the filter located on the generator's back panel. Additional filtration could increase the minimum feed pressure required.

Sequence of operations to perform before cutting

IMPORTANT: *Before switching on the equipment follow these instructions carefully:*

- Make sure the voltage and frequency of the supply network correspond to the data on the rating plate.
- Make sure all the torch components are correctly installed.
- Do not point the torch toward yourself or other persons nearby. If switched on accidentally the pilot arc spark would ignite and cause dangerous burns.

1) Turn the main switch (Pos. 5, Fig. A) to 1.
2) Check that the green LED (Pos. 11, Fig. B) on the front of the machine is on.
3) Push the testing button for initial airflow adjustment (Pos. 7, Fig. B) upward: air will come out of the torch for about 1 minute.
4) Check that the green AIR CHECK LED switches on (Pos. 8, Fig. B) on the machine's front panel.
5) Turn adjustment filter (Pos. 8, Fig. A) to adjust air pressure until the pressure gauge (Pos. 9, Fig. A) reads 5.5 bar. After about one minute, the air stops and the green AIR CHECK LED (Pos. 8, Fig. B) switches off.

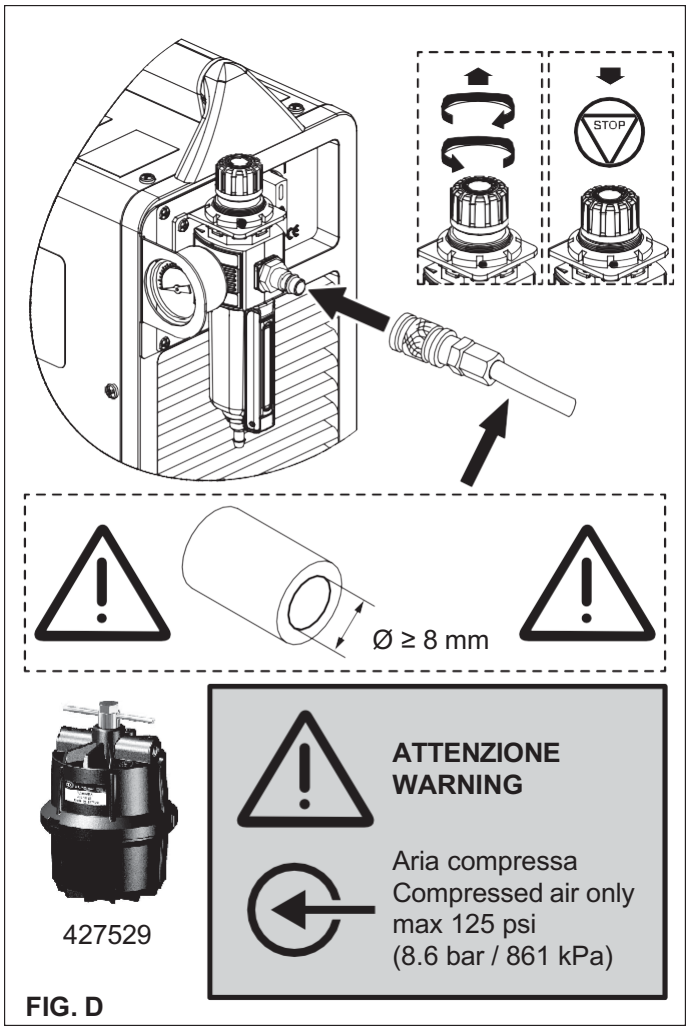

FIG. D

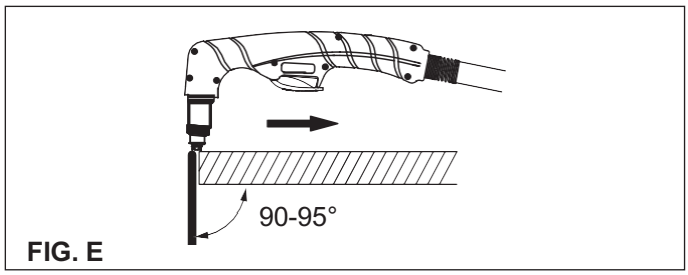

FIG. E

6) By pushing the cutting mode selection button (Pos. 6, Fig. B), according to the corresponding lit LED, the operator can select one of the following cutting modes:
   - Solid material mode: when the torch button is pushed, when the operator goes out of the workpiece during cutting, the arc switches off automatically.
   - Mesh material mode: when the torch button is pushed, when the operator goes out of the workpiece during cutting, the pilot arc ignites again automatically, to allow cutting to continue.
7) Adjust the cutting current by turning the potentiometer (Pos. 1, Fig. B). The digital amperometer will display the set cutting current. Increasing the current will permit higher speed cutting or, at the same speed, cutting of greater thickness.
8) Move the torch close to the workpiece (Fig. E) and, keeping the shield supported without exerting pressure, push the torch button, thereby igniting the pilot arc and the air supply. Introduce the flame to the workpiece and begin the cut. Go with the flame to the piece and start cutting. The red LEDs (Pos 9-10, Fig. B) are lit up during cutting operations. Do not keep the pilot arc in the air, to avoid needless consumption of the electrode and nozzle.
9) In special cases if the arc is switched off when the workpiece enters, observe the correct angle of inclination between the torch and the metal (Fig. E). A special control

device prevents arc transfer in case of incorrect inclination between the torch and the workpiece.

10) Cut taking care that the fused material flows through the groove and is not projected in the direction of the torch. If this occurs, reduce cutting speed.
11) Upon completion of the cutting operation, the air will continue to issue from the torch for about one minute so as to cool the torch components. Wait for the air to stop flowing before switching the equipment off. During this time, you can also start a new cutting operation. If you have to make cuts near corners or indentations, it is advisable to use extended electrodes and hoods. If you have to perform circular cuts, it is advisable to use the special compass supplied on request.

Maintenance

IMPORTANT: *The machine is to undergo routine maintenance, as suggested by the manufacturer.*

ATTENTION: *Cut off the power supply to the equipment before effecting any internal inspection.*

SPARE PARTS

Original spares have been specifically designed for our equipment.
The use of spares that are not original may cause variations in the performance and reduce the safety level of the equipment. We are not liable for damage due to use of spare parts that are not original.

THE EQUIPMENT

As these systems are completely static except for the fan that is, in any case, provided with self-lubricating bushes, only the following operations are necessary:

- Periodic removal of accumulations of dirt and dust inside the equipment using compressed air. Do not direct the air jet directly to electrical components that could be damaged.
- Periodical inspection for worn cables or loose connections that could cause overheating.
- Make sure the air circuit is completely free of any impurities and that the connections are tight and free of any leaks. In this regard, particular attention must be given to the solenoid valve and the air filter.
- Although the air filters do not have an automatic condensate drain, it is good practice to clean the air filter insert from time to time (Fig. R).

CARRYING OUT ROUTINE MAINTENANCE

WARNING: *Disconnect the electricity supply before doing maintenance work. All tasks that call for the generator's cover to be removed, must be done by a qualified technician.*

Each time you use the machine:

- Check the indication LEDs and fault icons. Correct any faulty condition.
- Check that the consumables are fitted correctly and are not worn.

Every 3 months:

- Inspect the power supply cable and plug. Replace if damaged.
- Check that the button is not damaged. Check that the torch grip is not cracked and there are no exposed wires. Replace any damaged component.
- Inspect the torch cable. Replace if damaged.

Every 6 months:

- Periodic removal of accumulations of dirt and dust inside the equipment using compressed air. Do not direct the air jet directly to electrical components that could be damaged.

INSPECTION OF CONSUMABLES

Component	Inspection	Action
O-ring on the torch body	Check that the surface is not damaged, worn or without lubrication.	If the O-ring is dry, lubricate it and the threads, with a thin layer of silicone lubricant. If the O-ring is worn or damaged, replace it.
Air diffuser	Check that the internal surface of the diffuser ring is not damaged or worn, and that the air holes are not obstructed.	Replace the diffuser ring if the surface is damaged or worn, or if the air holes are obstructed.
Electrode	max 1.6 mm	Replace the electrode if the surface is worn or the depth of the crater is more than 1,6 mm.

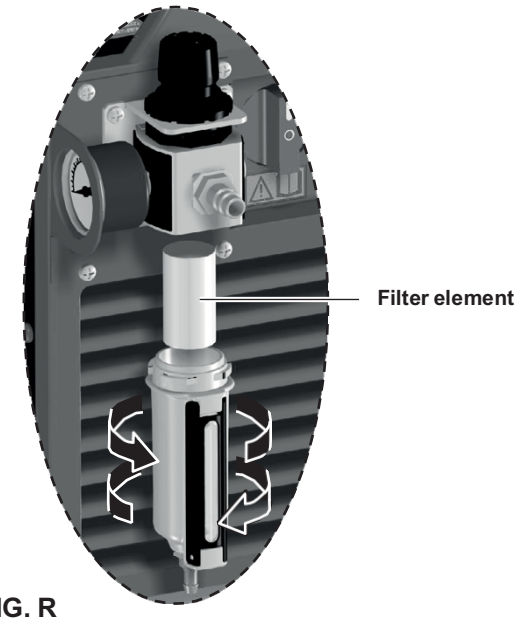

FIG. R

Nozzle	Roundness of the central hole.	Replace the nozzle if the central hole is not round.
Shield	Roundness of the central hole. Accumulation of debris in the space between the shield and the nozzle.	Replace the shield of the hole is oval. Remove the shield and clean off any debris.

Possible problems and remedies

The power line is the cause of most problems. In case of breakdowns proceed as follows:

1) Check the line value of the voltage
2) Check that the power cable is perfectly fastened to the plug and mains switch
3) Make sure the fuses are not burnt or loose
4) Check the following for defects:
   - The switch that powers the machine
   - The wall socket for the plug
   - The equipment power switch

NOTE: *Given the technical knowledge required for equipment repair, we recommend, in case of faults, that you contact qualified personnel or our technical support service.*

Troubleshooting table

It is normally possible to find the cause of a breakdown through the warning LEDS located on the right hand side of the front of the system. The first thing to do, therefore, is to check which leds are on. Here below we are listing some of the possible breakdowns that may occur on the system.

Defect	Cause	Remedy
Green power supply on LED switched off (Pos. 11, Fig. B)	• Cutting machine power supply cable not connected to the mains power supply	• Connect the cutting machine power supply cable to the mains power supply
	• Power supply switch off (Pos. 5, Fig. A)	• Switch on the machine by turning the power supply switch to position 1 (Pos. 5, Fig. A)
	• Mains voltage incorrect	• Check that the voltage for the power supply to the cutting machine corresponds to that for the actual mains power supply
	• Some components in the cutting machine are defective or malfunctioning	• Call in technical assistance
	• No power supply to the machine due to the action of fuses or trip switches for the power supply socket upstream of the machine	• Replace blown fuses or reset the trip switches that have tripped
Yellow thermostatic protection LED on (Pos. 3, Fig. B)	• When this LED switches on it indicates that the trip switch has tripped because you are working beyond the work cycle	• After several minutes the overheat cut-off rearms automatically (and the yellow LED turns itself off) and the welder is ready for use again
Yellow indication LED for no compressed air, switched on (Pos. 2, Fig. B)	• No compressed air or insufficient pressure	• Check and replace the pressure switch if necessary. • Check the feed circuit for the compressed air
	• Fault in the pneumatic circuit	• Check and replace the solenoid valve if necessary
Red torch button activation LED switched off (Pos. 10, Fig. B)	• Torch button circuit defective	• Replace the torch button
	• Outside nozzle holder on the torch not tight.	• Tighten the outside nozzle holder on the torch
No air when the torch button is pushed • Red torch button activation LED switched on (Pos. 10, Fig. B) • Red inverter activation LED switched off (Pos. 9, Fig. B)	• Control board defective	• Replace
	• Solenoid valve defective	• Replace
	• Compressed air supply circuit upstream of the machine, closed or faulty	• Open or repair the compressed air supply circuit for the machine.
Pilot arc does not go on when torch button is pressed • Red torch button activation LED switched on (Pos. 10, Fig. B) • Red inverter activation LED switched off (Pos. 9, Fig. B)	• Defective control board	• Replace
	• Worn electrode and hood on torch	• Replace
	• Torch button defective	• Replace
	• Plasma torch connected incorrectly or defectively.	• Check the plasma torch's connection and replace it if necessary.
	• Undervoltage or overvoltage protection activated	• Check that the power supply voltage is between 300 V and 480 V.
Arc goes out on contact with piece to be cut	• Lack of connection of ground wire	• Connect the earth cable or check the machine's earth circuit.

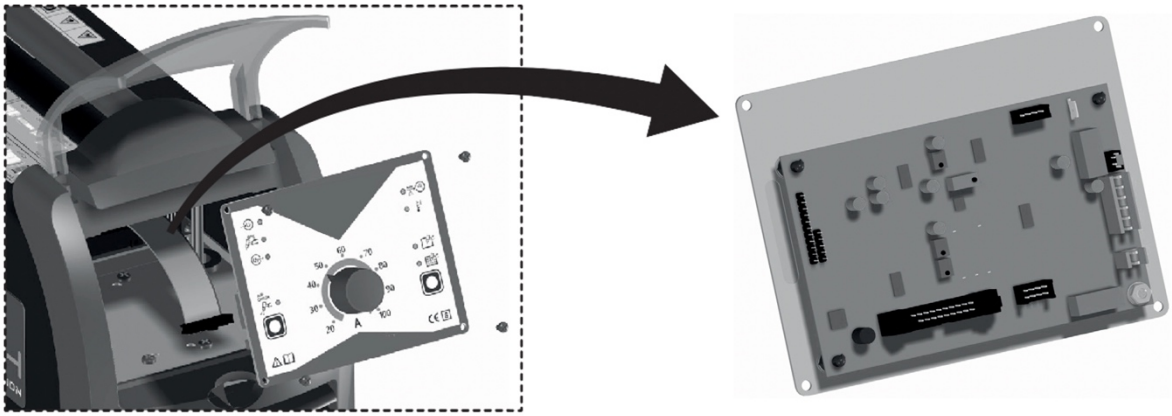

FIG. S

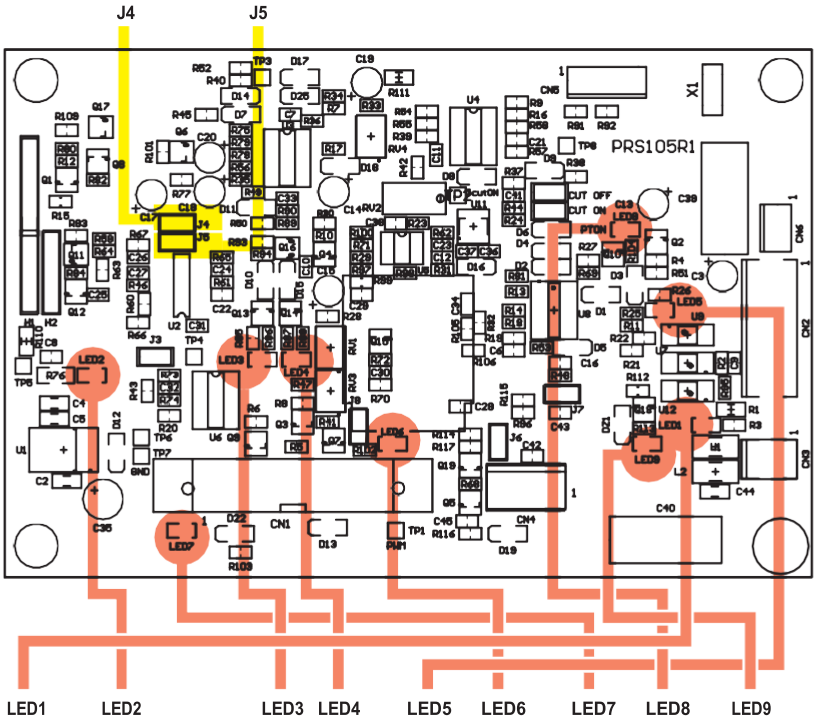

FIG. T

A more advanced search can be done for any faults, by accessing the front rack board and examining the diagnostic LEDs provided.
The purpose of this board is to allow the operator to regulate and interact with the machine and determines all the functions necessary for it to function, and for the cut to be executed.
The operator interface is in the form of a membrane keyboard on the front panel, which included diagnostic / functional LED's for the machine, and the operating buttons for selecting the cutting mode and activating the air flow test.
To be able to access the control board, proceed as follows (Fig. S):

- Unscrew the 4 screws that fix the front rack panel.
- The control board is fixed to the front rack, removed previously.

Figure T shows the layout of the front control rack board, highlighting the diagnostic LEDs and main trimmers fitted.

List of LEDs

LED1	Green LED, on when the TORCH BUTTON is pushed.
LED2	Green LED, on when the +24 voltage is on.
LED3	Green LED, on when the inverter board is in an OVER VOLTAGE state.
LED4	Green LED, on when the inverter board is in an UNDER VOLTAGE state.
LED5	Green LED, one when the ARC TRANSFERRED signal is active.
LED6	Green LED, on when the air solenoid valve is activated.
LED7	Green LED, on when the fan is switched on.
LED8	Green LED, on when the torch button signal is recognised by the board.
LED9	Green LED, on when the safety optical unit PT(U12) is switched off (PT OFF).

List of JUMPERS

JP1	When inserted, on switching on the machine will be in SOLID CUT mode.
JP2	When inserted, on switching on the machine will be in MESH CUT mode.

Common cutting defects

The table below provides an overview of common cut defects that can arise when using the machine and explains how to resolve them.

Defect	Cause	Remedy
Insufficient penetration	• Cutting speed too high	• Reduce speed
	• Current too low	• Increase current
	• Ground wire connected wrong	• Check ground wire connection
Main arc goes out	• Cutting speed too slow	• Increase speed
	• Excessive erosion of electrode	• Replace electrode
Excessive residues	• Cutting speed too slow	• Increase speed
	• Electrode hole eroded	• Replace electrode
Nozzle overheated or black	• Current too high	• Reduce current
	• Gap between the nozzle and workpiece too small.	• Increase space
	• Air dirty	• Clean air filter
	• Excessive erosion of electrode	• Replace electrode
Pilot arc intermittent or sparking	• Air dirty, greasy, wet	• Clean air filter
	• Pilot arc current too low	• Check the equipment pilot arc circuit
	• The air filter element is polluted, replace the element.	• Replace the element.
	• Check that there is no moisture in the air circuit.	• Install or repair the generator's air filter system.
The arc goes out but ignites again when the torch button is pushed again	• Consumables worn or damaged	• Inspect consumable components and replace them
	• Air dirty and polluted	• Replace the air filter element
	• Air pressure incorrect	• Make sure the air pressure is at the correct level
The quality of the cut is poor	• Torch not used correctly	• Check that the torch is used correctly
	• Consumables worn or damaged	• Check that the consumables are not worn, and replace if necessary
	• Incorrect pressure or poor quality air	• Check the air pressure and quality
	• Cutting mode selector in incorrect position	• Check that the cutting mode selector is in the correct position for the cutting operations.
	• Consumables not correct or fitted incorrectly	• Check that the correct consumables are fitted
The arc is not transferred to the plate	• Ground wire connected wrong	• Clean the contact area between the earth clamp and the plate, to ensure a good connection
	• Earth clamp damaged	• Repair or replace the earth clamp
	• Piercing distance too great	• Reduce the distance

Meaning of graphic symbols on machine

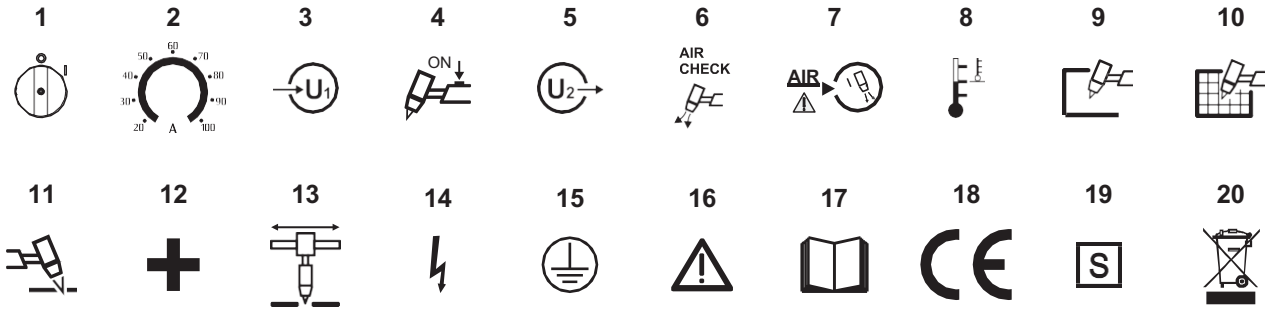

•**1** Main equipment switch •**2** Cutting current scale potentiometer •**3** Green LED: signals power ON •**4** Red LED: signals activation of torch button •**5** Red LED to indicate that the inverter is activated and the machine is working •**6** Green LED, air test activated •**7** Yellow LED: signals lack of compressed air •**8** Yellow LED for overheat cutoff •**9** Green LED, solid material cutting mode •**10** Green LED, mesh material cutting mode •**11** Centralised plasma torch connection connector •**12** Positive earth cable connection polarity •**13** Connector for CNC control •**14** Dangerous voltage •**15** Grounding protection •**16** Warning! •**17** Before using the equipment you should carefully read the instructions included in this manual •**18** Product suitable for free circulation in the European Community •**19** System for use in environments with increased risk of electrocution •**20** Special disposal

•1 **CNC**	•2 **CP**	•3 **CT**	•4 **D1-2**	•5 **EL**	•6 **EVG**	•7 **FE**	•8 **FR**	•9 **IL**	•10 **L**
•11 **M**	•12 **MI**	•13 **MV**	•14 **P**	•15 **PM**	•16 **PR**	•17 **PT**	•18 **Q1**	•19 **RF**	•20 **RP**
•21 **RV**	•22 **RSN**	•23 **S-AL**	•24 **S-INT DIG**	•25 **S-INV**	•26 **SL**	•27 **ST**	•28 **TA**	•29 **THI**	•30 **THP**
•31 **THS**	•32 **TIP**	•33 **TP**	•34 **TPL**	•35 **V**					

Key to the electrical diagram

•**1** CNC controller •**2** EMC condenser •**3** Plasma torch connector, machine side •**4** Secondary circuit diode module •**5** Plasma torch electrode •**6** Air solenoid valve •**7** EMC filter •**8** Regulator filter •**9** Mains switch •**10** Inductance •**11** Pressure gauge •**12** Primary circuit IGBT module •**13** Fan motor •**14** Current potentiometer •**15** Earth clamp •**16** Pressure switch •**17** Plasma torch button •**18** Pilot arc IGBT circuit •**19** Front panel membrane keyboard •**20** Primary circuit rectifier •**21** Voltage divider resistor •**22** Secondary circuit snubber resistor •**23** Power supply board •**24** Rack panel board •**25** Primary Inverter PCB •**26** Exhaust •**27** Plasma torch safety sensor •**28** Auxiliary transformer •**29** Inductor thermostat (SHARK 105) •**30** Primary circuit thermistor •**31** Secondary circuit thermostat •**32** Plasma torch nozzle •**33** Main transformer •**34** Plasma torch •**35** Secondary circuit “

Wiring diagram Power CUT 105

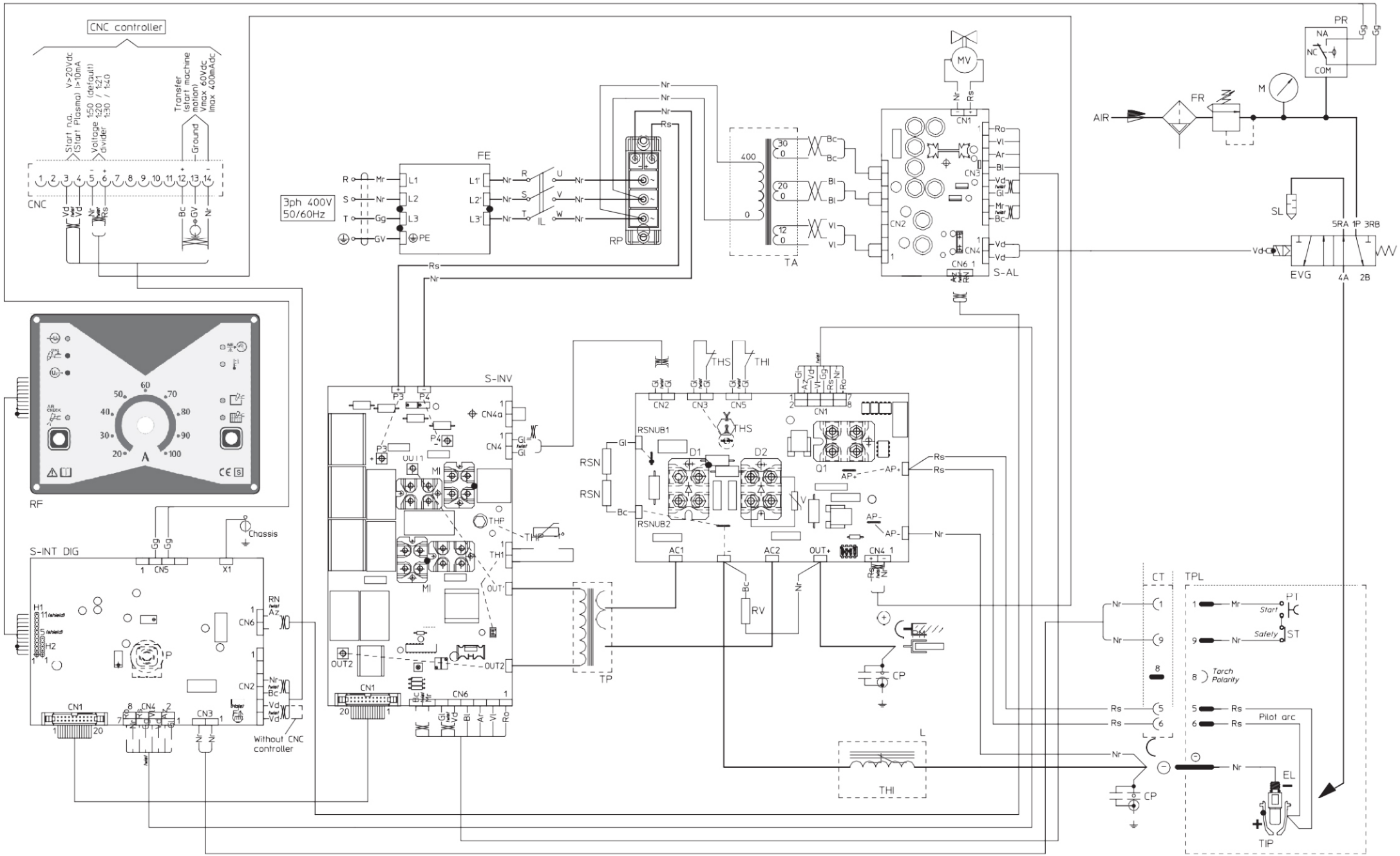

PoWer CUT Series

GeKaMac®

PoWer CUT 105

Users Manual

Please Read and Understand This Manual
Before Operating The Welding Machine

www.gedikwelding.com

1

Pos.	POWER CUT 105	Description
1	352453	Front rack transparent visor
2	352378	Plastic front panel complete with logo GEKAMAC sticker
3	468191	Logo GEKAMAC sticker for front panel
4	403608	Quick connection positive polarity
5	419129	Panel CNC 14P female connector complete of female terminals
6	520717	Female terminal for connector CNC (No.10 pcs)
7	460180	Mobile CNC 14P male connector complete of male terminals
8	460179	Male terminal for connector CNC (No.10 pcs)
9	236648	Central connector for plasma torch
10	461947	Female terminal for central connector (No.10 pcs)
12	239623	Work cable and clamp

Pos.	POWER CUT 105	Description
13	468750	Sticker logo PLASMATECH
14	438103	Handle
15	438710	Knob for main switch
16	432029	Air filter with adjustment pressure
17	404370	Input air nipple 1/4 gas
18	438400	Manometer
19	352377	Plastic rear panel
20	427895	Main cable clamp
21	235994	Main cable
22	420483	Steel cover complete of logo PLASMATECH sticker
23	468750	Logo PLASMATECH sticker

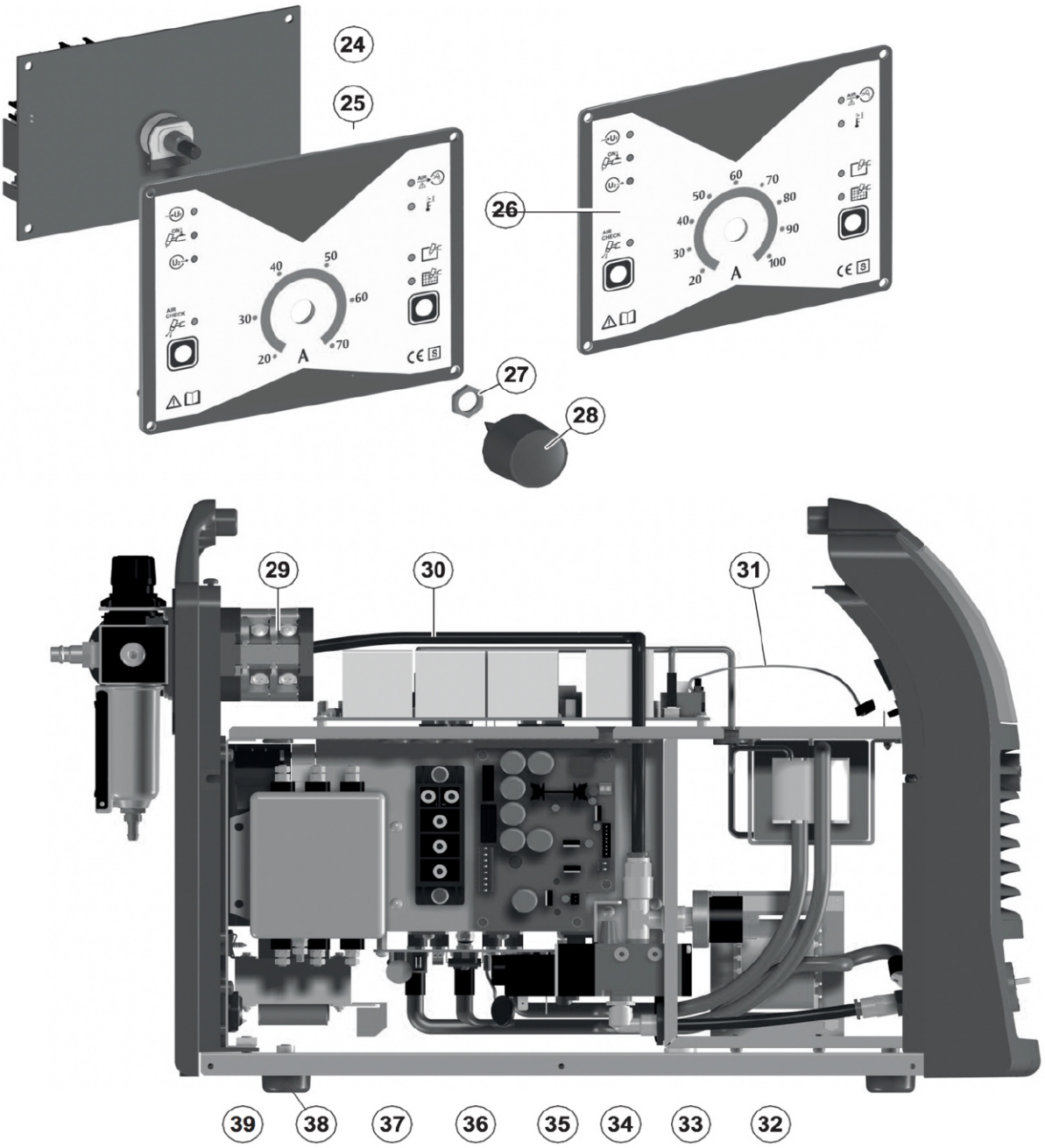

Pos.	POWER CUT 105	Description
24	377182	Rack control PCB
25	452989	Adjustment current potentiometer
26	439400	Rack membrane keyboard complete of steel support
27	423112	Potentiometer nut
28	438883	Current knob
29	435755	3PH main switch
30	485497	Ø6x8 rilsan hose
31	413442	Electric wiring
32	453245	Pressostat
33	425946	Air solenoid valve
34	463211	Solenoid air valve steel bracket
35	377183	Auxiliary power supply PCB
36	455517	3PH Primary bridge rectifier
37	376887	EMC filter
38	431329	Rubber foot
39	404898	Steel base

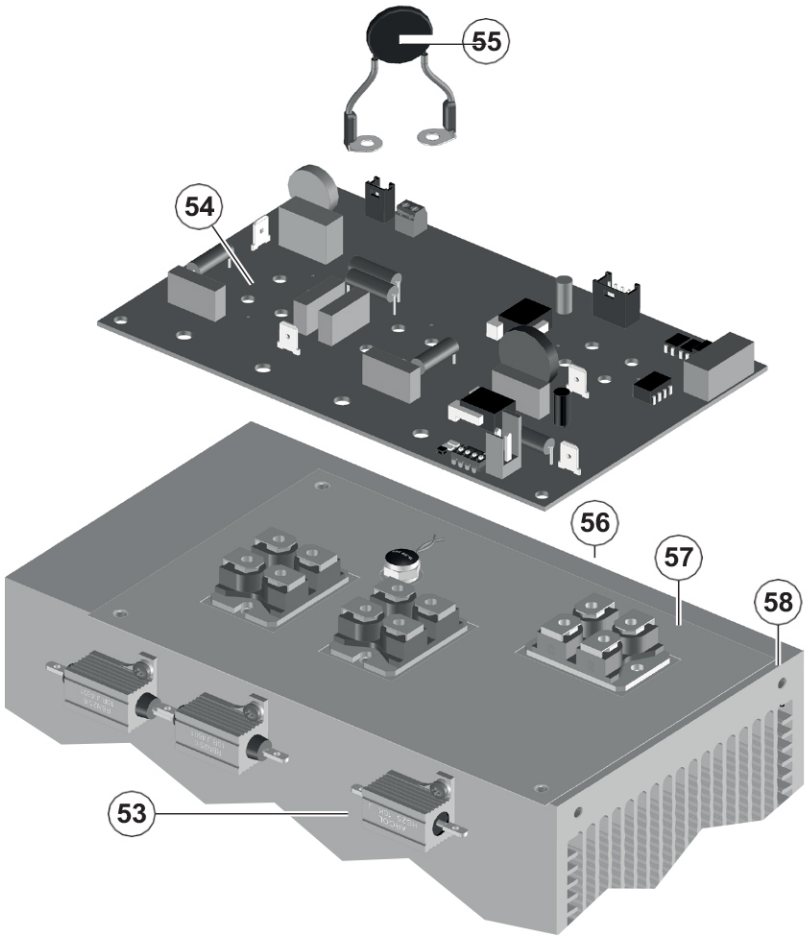

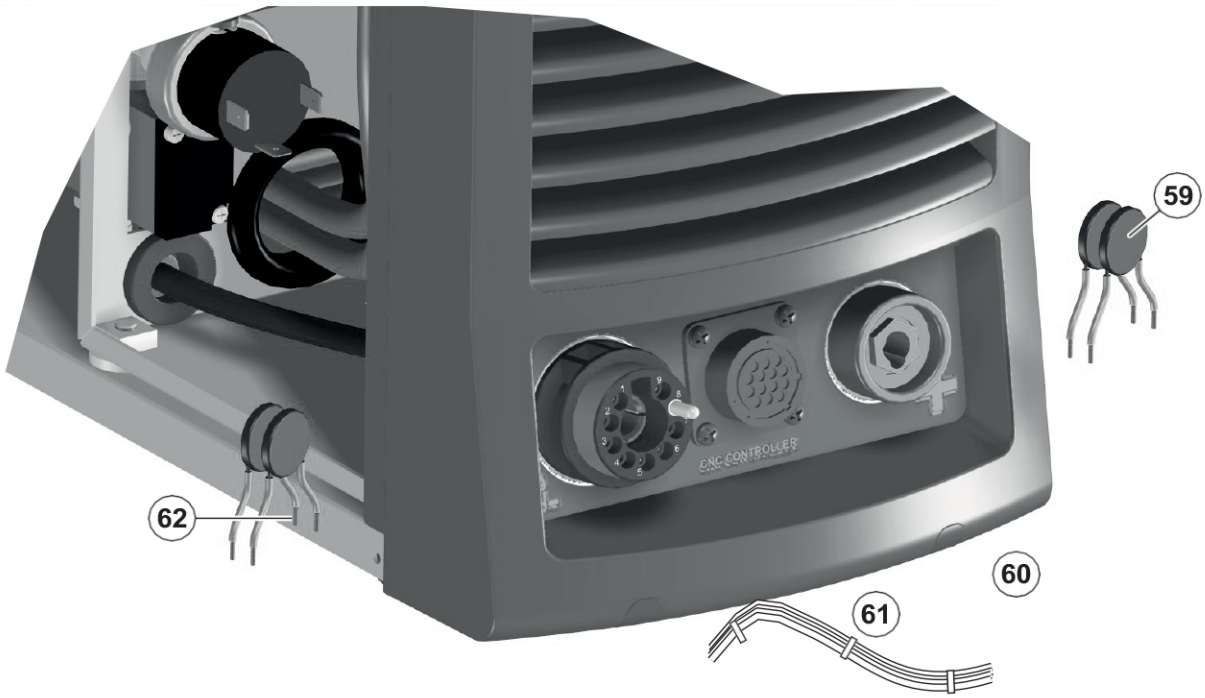

Pos.	POWER CUT 105	Description
53	423236	Secondary power diode
54	377184	Secondary PCB
55	418886	Secondary varistor
56	478846	Secondary diode thermostat
57	286039	Pilot arc IGBT module
58	352382	Secondary circuit insulation sheet
59	418858	EMC capacitor for positive pole
60	466869	DINSE / central plasma connector sticker
61	413392	Electric wiring for CNC controller
62	418854	EMC Capacitor for negative pole

EN Ordering spare parts

To ask for spare parts clearly state:

1) The code number of the piece
2) The type of device
3) The voltage and frequency read on the rating plate
4) The serial number of the same

EXAMPLE

N. 2 pieces code n. 377184 - for Power CUT 105 - 50/60 Hz
- Serial number .....

PoWer CUT Series

GeKaMac®

Gedik Welding Inc.
Ankara Caddesi No: 306 Şeyhli 34906 Pendik - İstanbul / Turkey
P. +90 216 378 50 00 • **F.** +90 216 378 20 44
www.gedikwelding.com